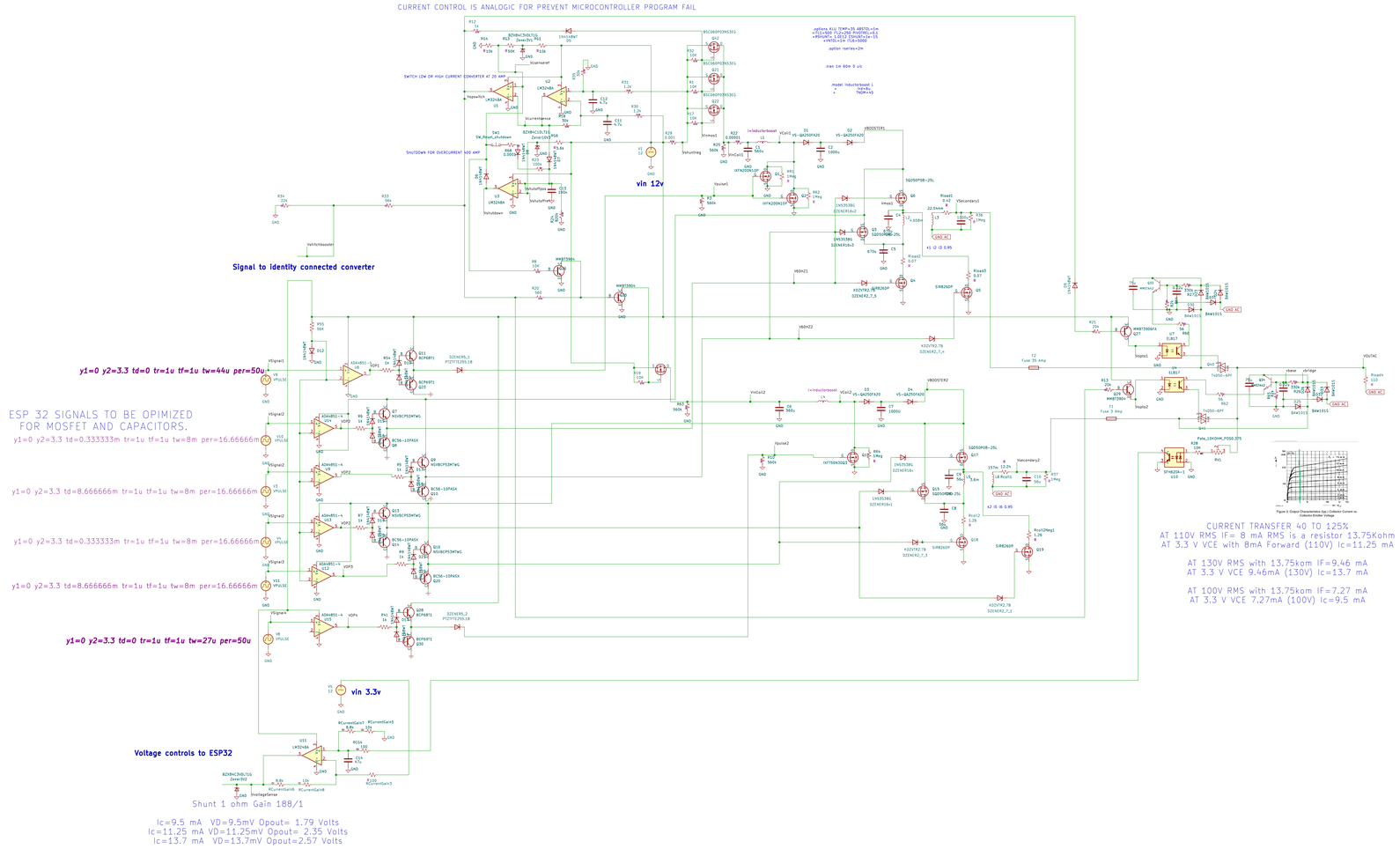

FOR BATTERY CHARGE WITH 3 DEVICES:

CONDITION ABS(VIN − VOUT) < 1 V (BUCK-BOOST CONVERTER)

NEXT TWO CONDITIONS ARE BY SOFTWATER FORCING OFF MOSFETS

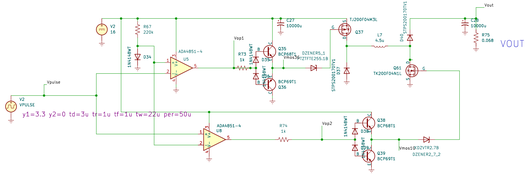

CONTROL REMOTE CIRCUIT FOR THE ALGORITHM DEVICE NUMBER = ON , DEVICE NUMBER +1 = OFF
WHICH USE ODD AN EVEN TO ACT OVER THE PULSE FOR ON OR OFF AND 8 BITS FOR CODING.

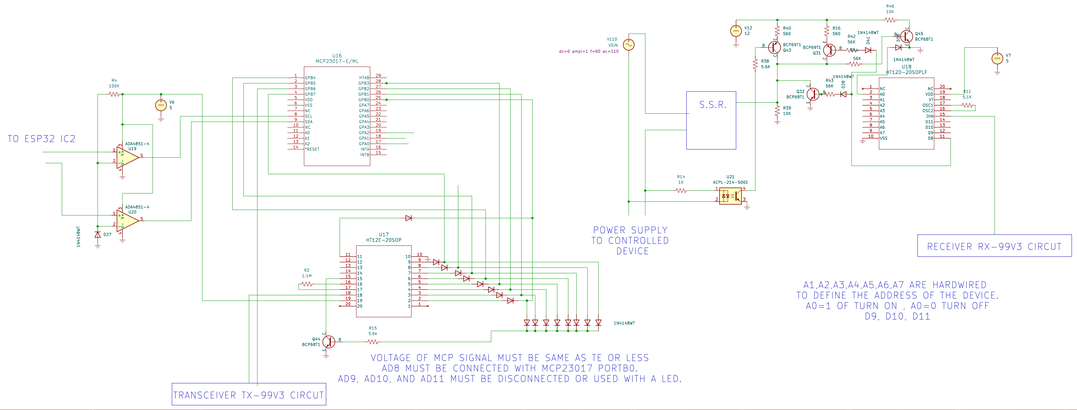

Added circuit for control remote.
from previous design simplified by adding more
signals in microcontroller.
Darle Martin Lobos (patent pending)
Sheet: /
File: NEW BOOSTER.kicad_sch

Title: Battery Charger and DC/AC converter

Size: A2	Date: 2025-03-20	Rev: 2
KiCad E.D.A. 9.0.7-unknown		Id: 1/1